MORTAGE PLOTS AGAINST INTERNAL DEVELOPMENT WORK			
S.NO.	PLOT NO.	AREA(Sq. Mtr.)	LEGEND
1	12A	118.86	
2	18	98.86	
3	19	95.77	
4	27	107.69	
5	28	107.07	
TOTAL PLOTS AREA		528.25	

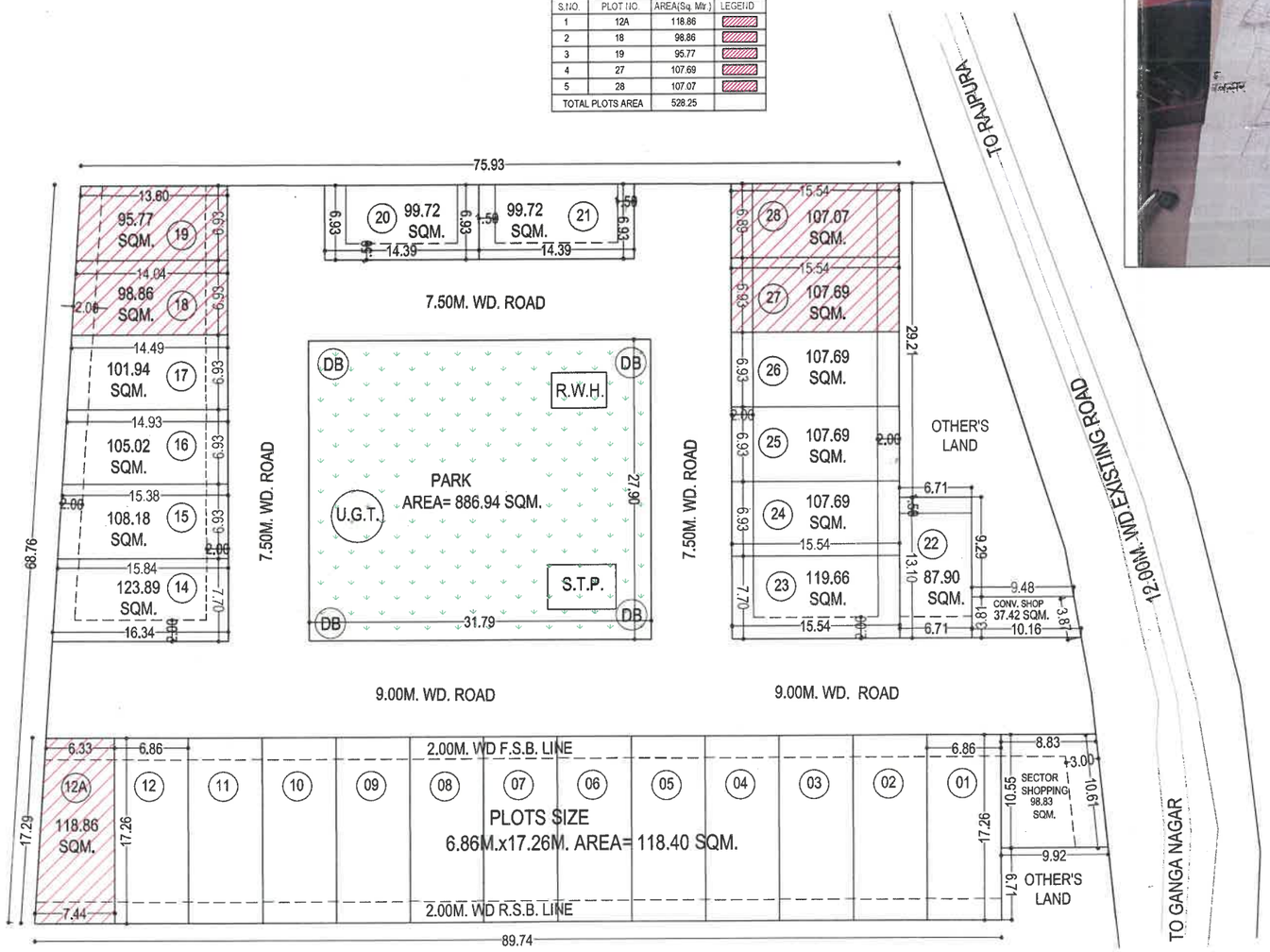

LAYOUT PLAN

SAZRA PLAN
NOT TO SCALE

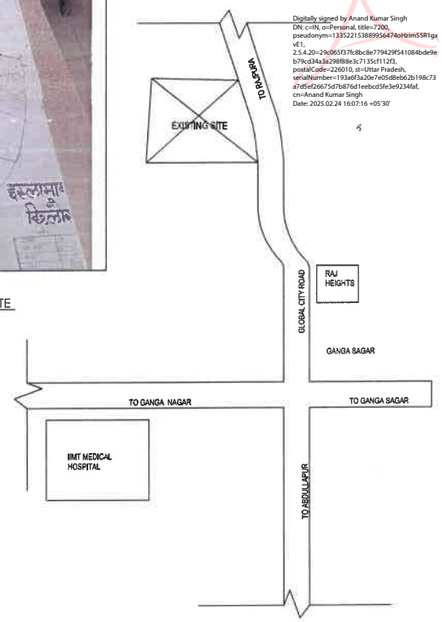

KEY PLAN
NOT TO SCALE

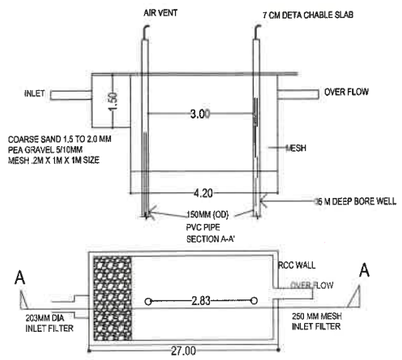

PLAN OF RAIN WATER HARVESTING

MDA

Vijay Kumar Singh

Digitally signed by Vijay Kumar Singh
Date: 2025.02.15 15:58:59 +05'30'

Anand Kumar Singh

Digitally signed by Anand Kumar Singh
DN: c=IN, o=Personal, title=7200, pseudonym=1335221538899564740bbim55R1gxvE1, 2.5.4.20=29c065f37fc8bc8e779429f541084bde9eb79cd34a3a298f88e3c7135cf112f3, postalCode=226010, st=Uttar Pradesh, serialNumber=193a6f3a20e7e05d8eb62b198c73a7d5ef266755d7b876d1eebcd5fe3e9234faf, cn=Anand Kumar Singh
Date: 2025.02.24 16:07:16 +05'30'

EXISTING /COMPUNDING RESIDENTIAL LAYOUT PLAN OF **HARI VATIKA** COLONY, KHASRA NO.-136,137 VILLAGE- RAJPURA, MAWANA ROAD, MEERUT

AREA CHART:-

PERTICULARS	%	IN SQM
TOTAL LAND AREA AS PER DOCOMENT		6313.00
TOTAL LAND AREA AS PER SITE		5902.39
AREA UNDER RESIDENTIAL PLOTS	52.62	3117.58
AREA UNDER COMM. PLOTS	2.31	136.25
AREA UNDER PARK	15.02	886.94
AREA UNDER ROAD	29.85	1761.82

1- TOTAL NO. OF RESI. PLOTS - 28
2- POPULATION- 28*5= 140
3- DENSITY- 140/0.590=237.29
Say 237

LEGEND:-
1- SITE BOUNDRY
2- DRAINS
3- WATER MAIN
4- SEWER LINE
5- ELECTRIC LINE
6- TREES
7- OHT AND TUBE WELL
8- EXISTING BOUNDARY WALL SHWON AS
9- TO BE DEMOLISH AREA SHWON AS
10- DUSTBIN

OWNER:-
M/S HIMANI ASSOCIATES
(PARTNER)
SH. NARENDRA KUMAR SHARMA

SIGNATURE

ARCHITECT:-
NAMAN KUMAR
B.Arch
Architect
(Reg. No. CA/2022/149476)
Regd. Architect of Council of Architecture

NORTH:-

SCALE:- 1:500